MERCRUISER (D4.2L/220 IDI VM 254 I/L6)
Serial Nbr Range: 0D554732 thru 0M999999 ()

ALTERNATOR AND MOUNTING HW. (S/N-0F319302 AND UP)

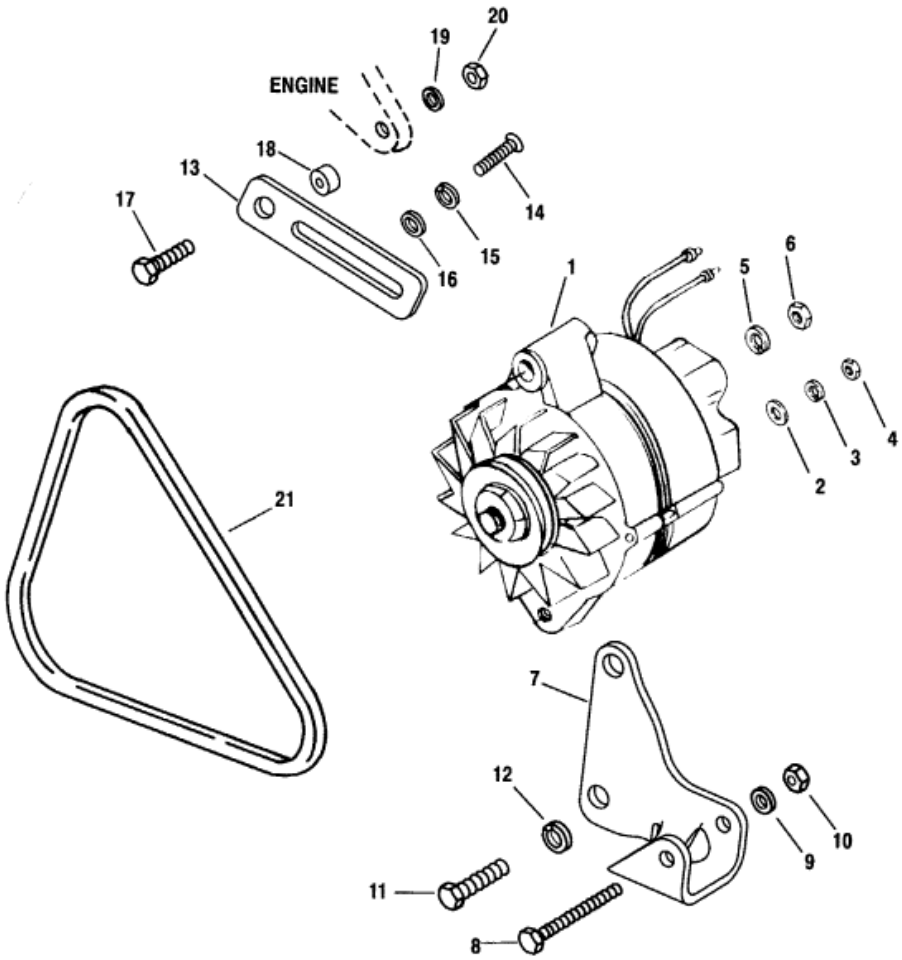

Parts List

Ref	Class	Part	Description	Qty	Comment	Footnote
1		805884T	ALTERNATOR	1		
2	12	96457	WASHER	1		
3	13	26992	LOCKWASHER (#1/4)	1		
4	11	94330	NUT (1/4 - 20)	1		
5	13	26996	LOCKWASHER (#10)	2		
6	11	79989	NUT (10 - 24)	2		
7		806979T	BRACKET	1		
8		807035T	SPACER PLATE	1		
9	10	68299	SCREW	1		
10	12	40023 20	WASHER	1		
11	11	826709 12	NUT	1		
12	13	40025 10	LOCKWASHER	2		
13		806980T	BRACE	1		
14	10	35386	SCREW	1		
15	13	53166	LOCKWASHER	1		
16	12	814806	WASHER	1		
17	10	40003 82	SCREW	1		
18	23	807030	SCREW	1		
19	12	40023 19	WASHER	1		
20	11	40136 10	NUT	1		
21	57	64032A 1	V BELT	1		